VSP Pumps with inverters

Clean water

Domestic use

Civil use

INSTALLATION AND USE

VSP is a versatile pumping unit designed for various applications. It's ideal for residential and commercial use, providing water supply and pressure boosting.
VSP seamlessly integrates with any pressurization system, including existing ones, ensuring maximum comfort and enabling significant energy savings.

PRODUCT DESCRIPTION

VSP is a system comprising a pump and an integrated frequency converter. Equipped with a pressure sensor, it ensures a constant pressure as the system's water demand fluctuates.

This ready-to-use product eliminates the need for configuration procedures. Users can adjust the working pressure and view operating parameters and alarm messages via the user interface.

For advanced users, the system offers access to an advanced menu for modifying factory parameters through a guided procedure, allowing adaptation to specific plant conditions.

VSP is an intelligent pumping unit, equipped with:
※ **display and keypad** allowing simple and intuitive configuration and reading of operating parameters;
※ interface ports for additional **analogue** and **digital** input and output **signals**;
※ **PFC technology** maintains hydraulic performance unaffected even when supply voltages vary within ±20% of the nominal value;
※ **RS 485 communication** for connection to a second device in parallel.

Integrated protection against:
※ dry running
※ overcurrent
※ overvoltage and undervoltage
※ combustion chamber
※ short circuit
※ lack of phases in the connections (for three-phase version)

TECHNICAL DATA

- Power supply:
  – **1~ 230V±10%** or **3~ 400V±10%**
  – Frequency: **50/60 Hz**
- Please refer to the technical data of the specific electropumps for liquid temperature, ambient temperature, and protection degree.

KEY FEATURES

※ Easy installation, configuration, and adjustment.
※ Greater comfort, thanks to optimized performance and low noise levels.
※ Energy saving reduces startup and operating currents, ensuring.
※ Automatic compensation for fluctuations in the supply voltage.
※ Communication with another device to enhance system capabilities.
※ Intelligent management of control and intervention in case of anomalies.

USER INTERFACE

It enables access to configuration menus, navigation through settings, adjustment of operating parameters, and activation or deactivation of the pumping unit.

1. Scroll arrow keys
2. ESC menu exit key
3. ON/OFF button
4. Confirmation button OK
5. 4-backlit display to indicate the operating status of the VSP

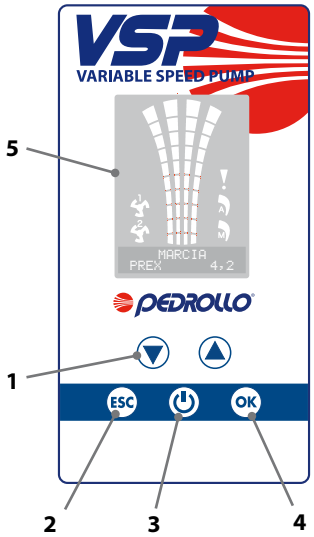

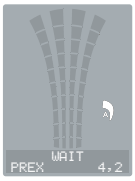

WHITE display EXPECTATION

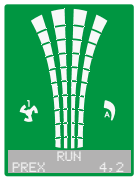

Display VERDE START

RED display ERROR

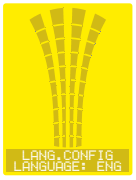

YELLOW display (MENU OF PROGRAMMING

DISPLAY SYMBOLS

6. ALARM warning light
7. AUTOMATIC operation indicator light
8. MANUAL operation indicator light
9. Indicator light for running pump no. 1
10. Indicator light for running pump no. 2 (if present)
11. WI-FI active indicator light (if present)
12. Alphanumeric display with 2 lines for visualization of: voltage, frequency, current, power factor (cosφ), pressure, level, system operating status, system anomalies.
13. VSP operating status LED lights

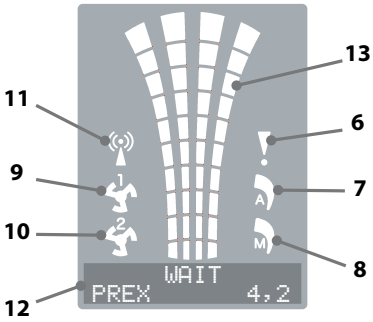

TYPICAL INSTALLATION

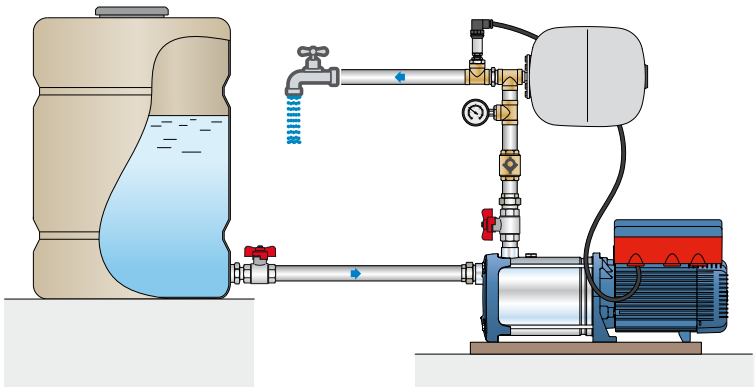

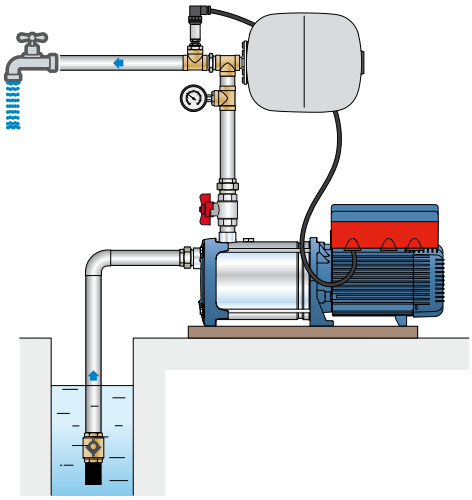

VSP – FCR

PERFORMANCE RANGE

50 Hz

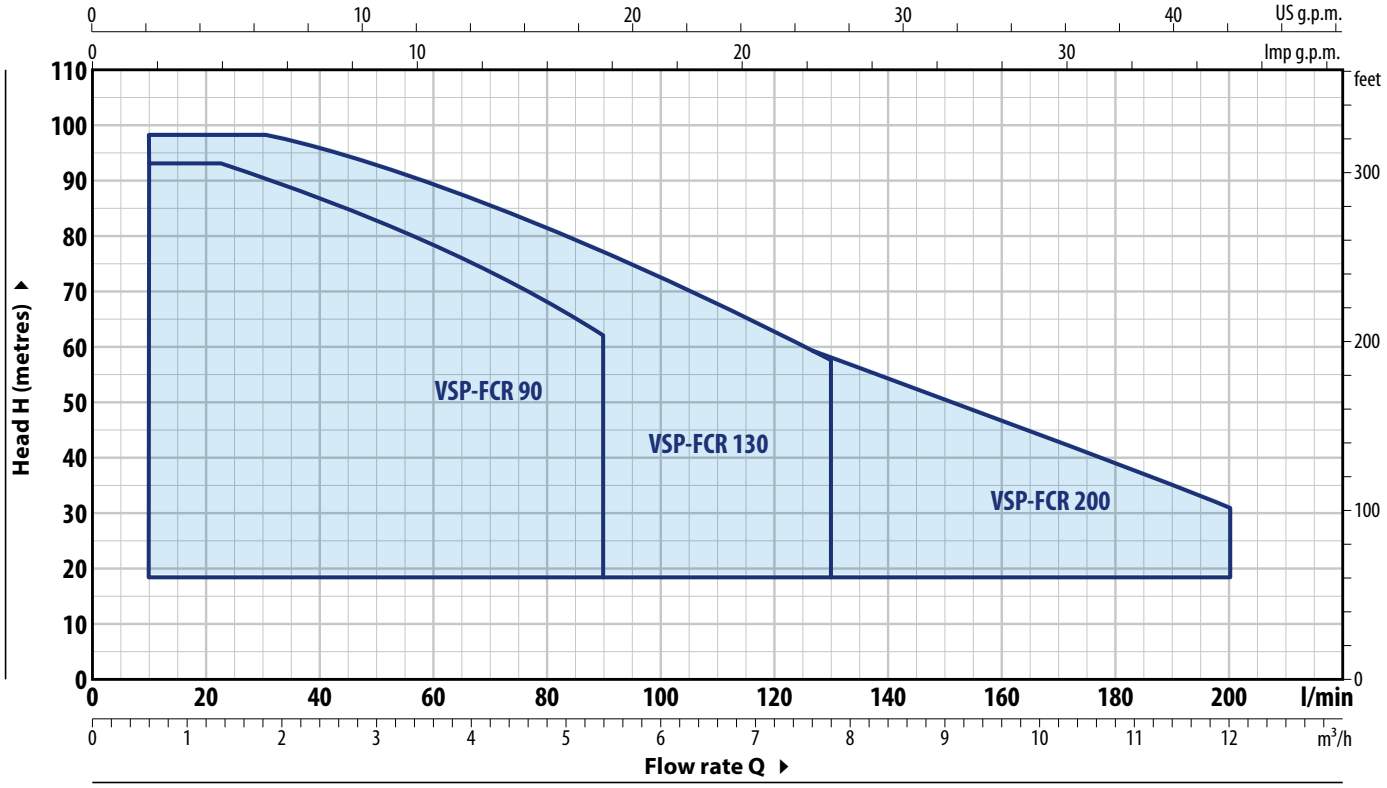

TECHNICAL DATA

TYPE	POWER P2		ABSORPTION 230 V	PERFORMANCE		PERFORMANCE (ADJUSTABLE SET POINT)					
				Q	H	Set Point Min		**Set Point Calibration Std**		Set Point Max	
Single-phase	**kW**	**HP**		litres/min	metres	bar	l/min	bar	l/min	bar	l/min
VSPm - FCR 75/90	1.5	2	9.8 A	5 – 90	71.5 – 43.5	1.9	5 – 60	**4.0**	**5 – 86**	7.0	5 – 16
VSPm - FCR 80/130	1.5	2	9.8 A	5 – 130	74.5 – 30	2.0	5 – 107	**4.0**	**5 – 107**	7.3	5 – 22
VSPm - FCR 70/200	1.5	2	9.8 A	5 – 200	65.5 – 21	1.8	5 – 180	**4.0**	**5 – 115**	6.4	5 – 36

TYPE	POWER P2		ABSORPTION 400 V	PERFORMANCE		PERFORMANCE (ADJUSTABLE SET POINT)					
				Q	H	Set Point Min		**Set Point Calibration Std**		Set Point Max	
Three-phase	**kW**	**HP**		litres/min	metres	bar	l/min	bar	l/min	bar	l/min
VSP - FCR 75/90	1.5	2	3.6 A	5 – 90	71.5 – 43.5	1.9	5 – 60	**4.0**	**5 – 86**	7.0	5 – 16
VSP - FCR 100/90	2.2	3	4.9 A	5 – 90	94 – 62.5	2.5	5 – 58	**4.0**	**5 – 71**	9.2	5 – 20
VSP - FCR 80/130	1.5	2	3.6 A	5 – 130	74.5 – 30	2.0	5 – 107	**4.0**	**5 – 107**	7.3	5 – 22
VSP - FCR 105/130	2.2	3	4.9 A	5 – 130	98 – 57.5	2.7	5 – 90	**4.0**	**5 – 107**	9.6	5 – 30
VSP - FCR 70/200	1.5	2	3.6 A	5 – 200	65.5 – 21	1.8	5 – 180	**4.0**	**5 – 115**	6.4	5 – 36
VSP - FCR 95/200	2.2	3	4.9 A	5 – 200	87.5 – 42	2.4	5 – 178	**4.0**	**5 – 175**	8.6	5 – 32

PERFORMANCE CURVES

50 Hz

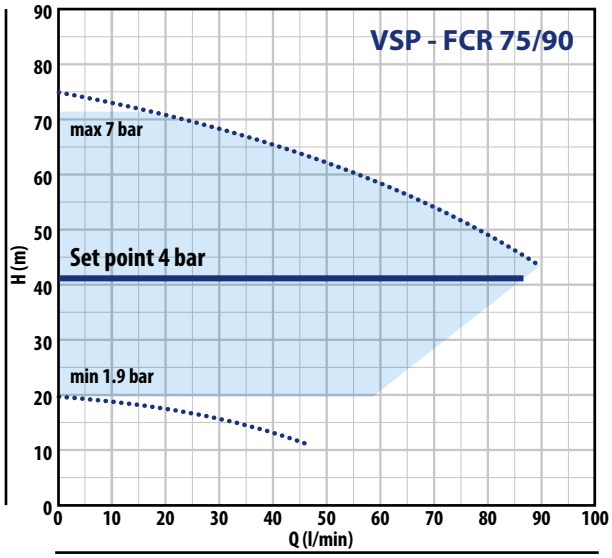

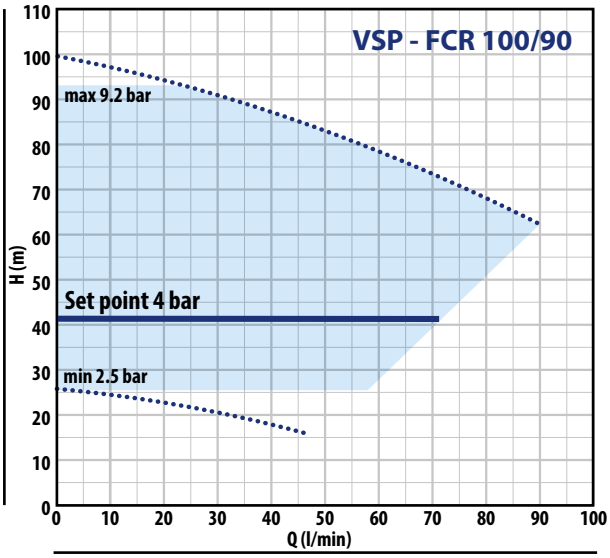

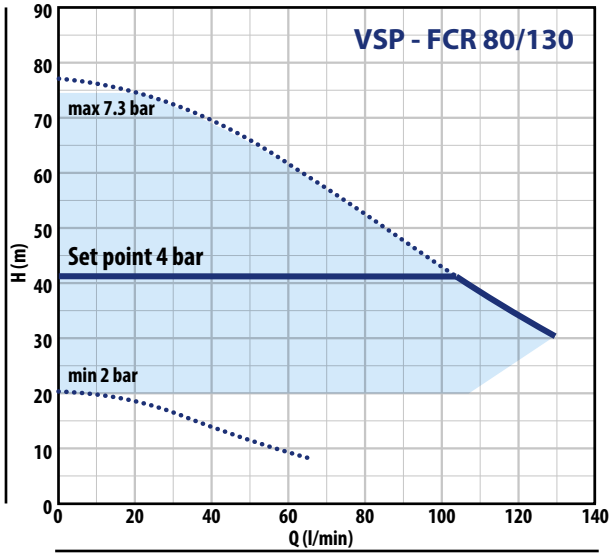

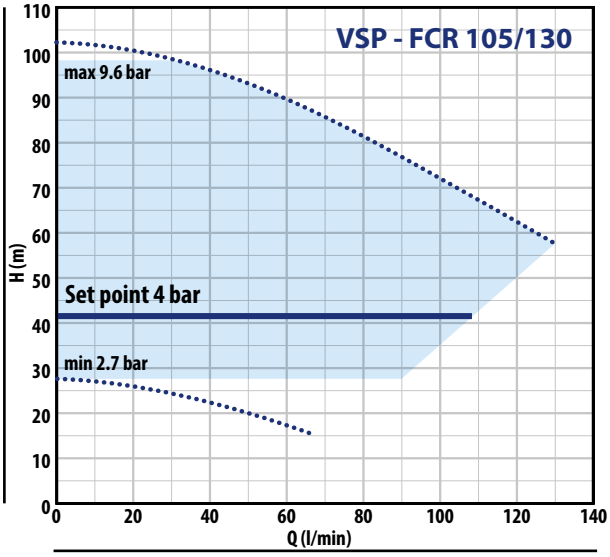

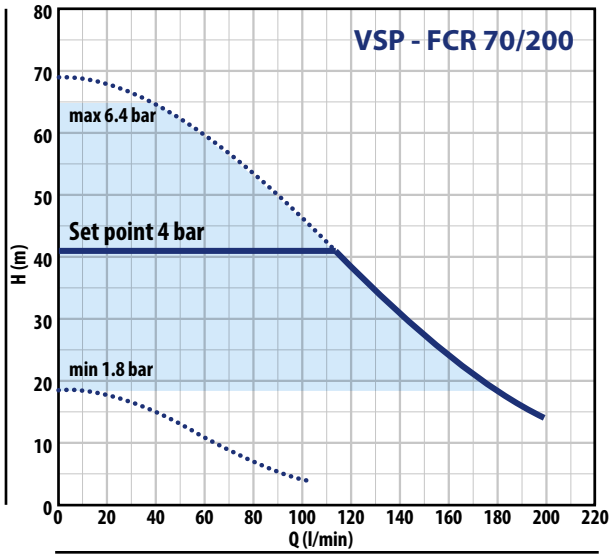

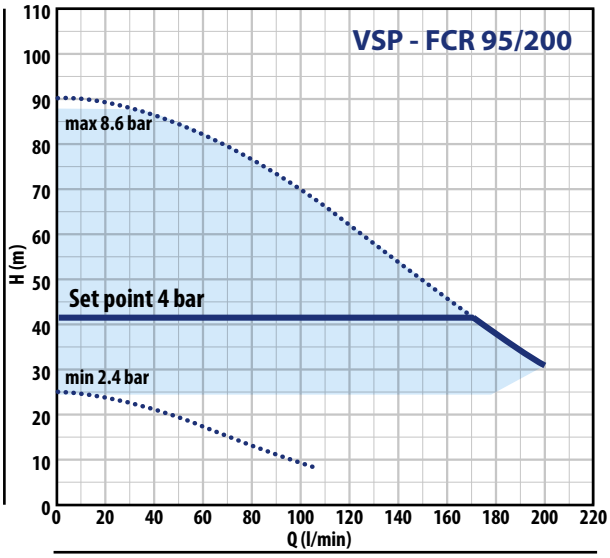

VSP – FCR

DIMENSIONS AND WEIGHT

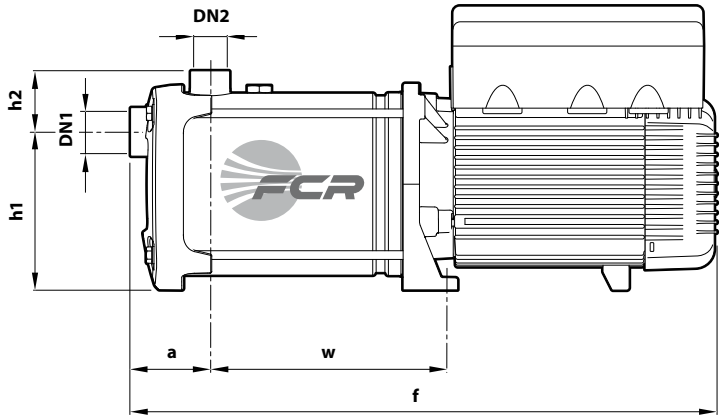

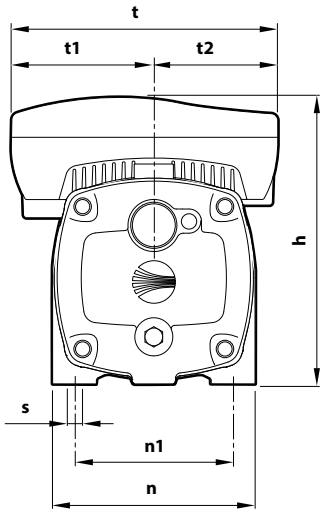

TYPE		PORTS		DIMENSIONS mm												kg	
Single-phase	**Three-phase**	DN1	DN2	f	a	w	h	h1	h2	t	t1	t2	n	n1	s	1~	3~
VSPm - FCR 75/90	**VSP - FCR 75/90**	**1¼"**	**1"**	445	75	139	260	145	59	242	129	113	185	145	11	21.7	21.7
–	**VSP - FCR 100/90**			471		165										–	21.9
VSPm - FCR 80/130	**VSP - FCR 80/130**			445		139										21.9	21.9
–	**VSP - FCR 105/130**			471		165										–	21.9
VSPm - FCR 70/200	**VSP - FCR 70/200**			445		139										24.1	23.9
–	**VSP - FCR 95/200**			471		165										–	24.0

VSP – PLURIJET

PERFORMANCE RANGE

50 Hz

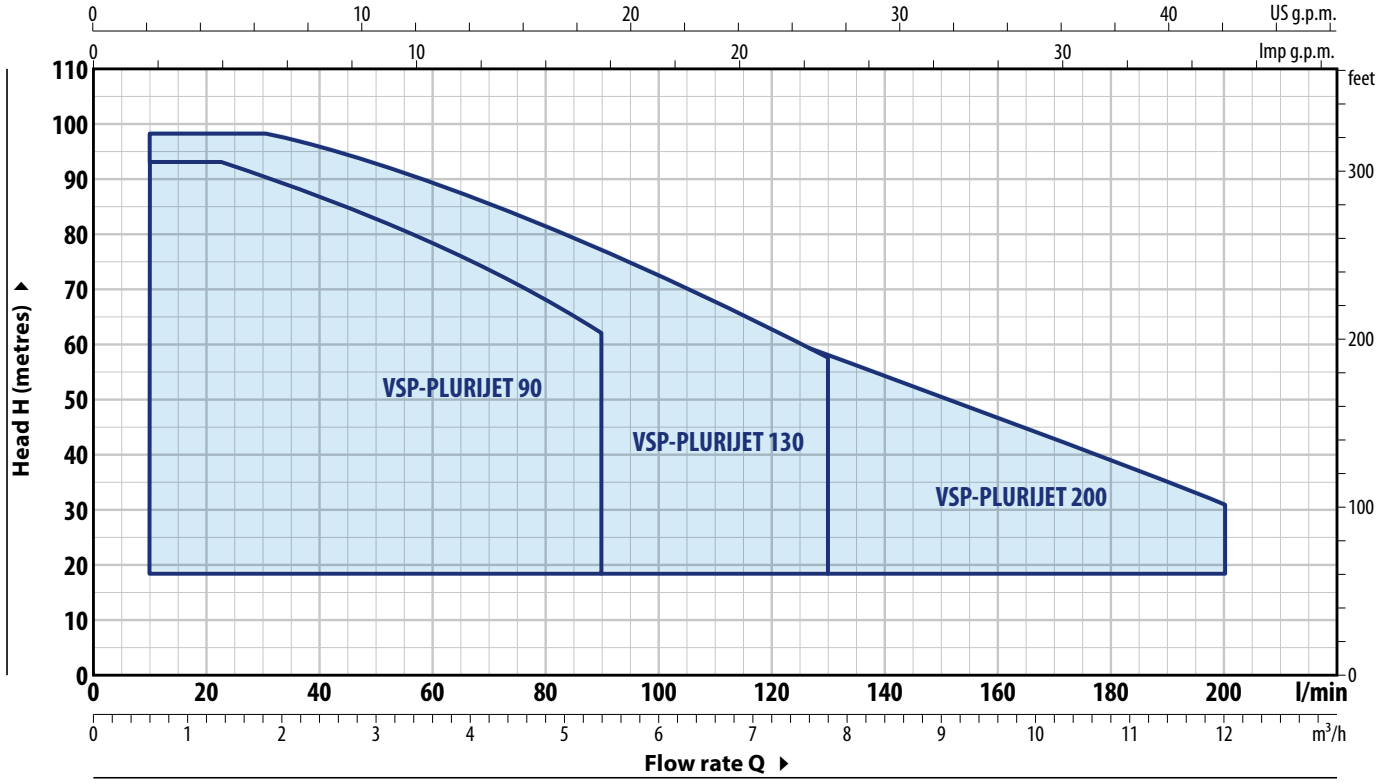

TECHNICAL DATA

TYPE	POWER P2		ABSORPTION 230 V	PERFORMANCE		PERFORMANCE (ADJUSTABLE SET POINT)					
				Q	H	Set Point Min		Set Point Calibration Std		Set Point Max	
Single-phase	**kW**	**HP**		litres/min	metres	bar	l/min	bar	l/min	bar	l/min
VSPm - PLURIJET 75/90	1.5	2	9.8 A	5 – 90	71.5 – 43.5	1.9	5 – 60	**4.0**	**5 – 86**	7.0	5 – 16
VSPm - PLURIJET 80/130	1.5	2	9.8 A	5 – 130	74.5 – 30	2.0	5 – 107	**4.0**	**5 – 107**	7.3	5 – 22
VSPm - PLURIJET 70/200	1.5	2	9.8 A	5 – 200	65.5 – 21	1.8	5 – 180	**4.0**	**5 – 115**	6.4	5 – 36

TYPE	POWER P2		ABSORPTION 400 V	PERFORMANCE		PERFORMANCE (ADJUSTABLE SET POINT)					
				Q	H	Set Point Min		Set Point Calibration Std		Set Point Max	
Three-phase	**kW**	**HP**		litres/min	metres	bar	l/min	bar	l/min	bar	l/min
VSP - PLURIJET 75/90	1.5	2	3.6 A	5 – 90	71.5 – 43.5	1.9	5 – 60	**4.0**	**5 – 86**	7.0	5 – 16
VSP - PLURIJET 100/90	2.2	3	4.9 A	5 – 90	94 – 62.5	2.5	5 – 58	**4.0**	**5 – 71**	9.2	5 – 20
VSP - PLURIJET 80/130	1.5	2	3.6 A	5 – 130	74.5 – 30	2.0	5 – 107	**4.0**	**5 – 107**	7.3	5 – 22
VSP - PLURIJET 105/130	2.2	3	4.9 A	5 – 130	98 – 57.5	2.7	5 – 90	**4.0**	**5 – 107**	9.6	5 – 30
VSP - PLURIJET 70/200	1.5	2	3.6 A	5 – 200	65.5 – 21	1.8	5 – 180	**4.0**	**5 – 115**	6.4	5 – 36
VSP - PLURIJET 95/200	2.2	3	4.9 A	5 – 200	87.5 – 42	2.4	5 – 178	**4.0**	**5 – 175**	8.6	5 – 32

VSP – PLURIJET

PERFORMANCE CURVES

50 Hz

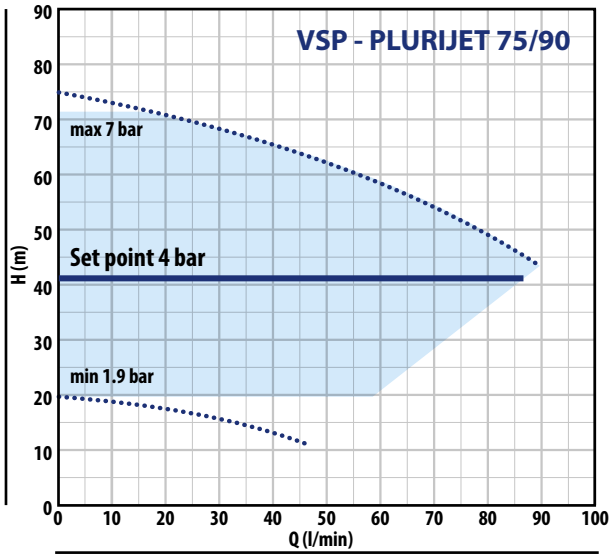

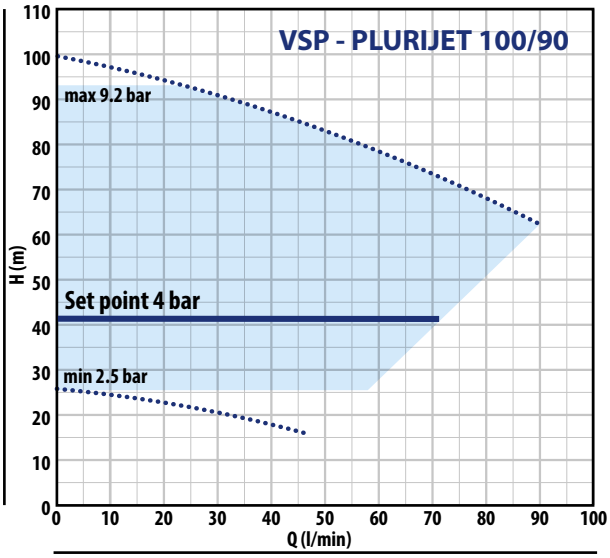

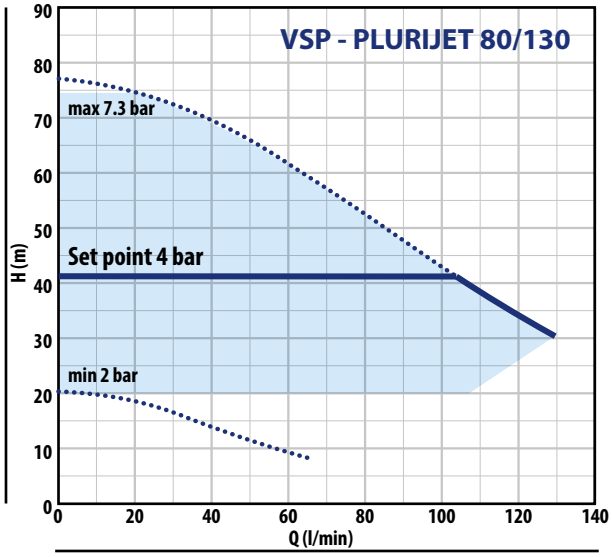

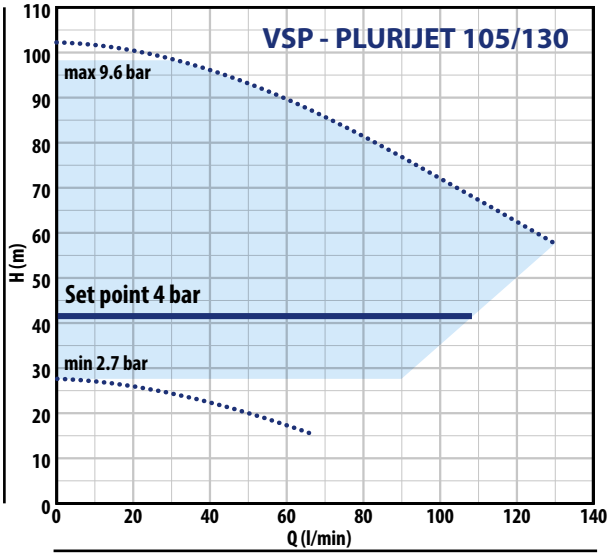

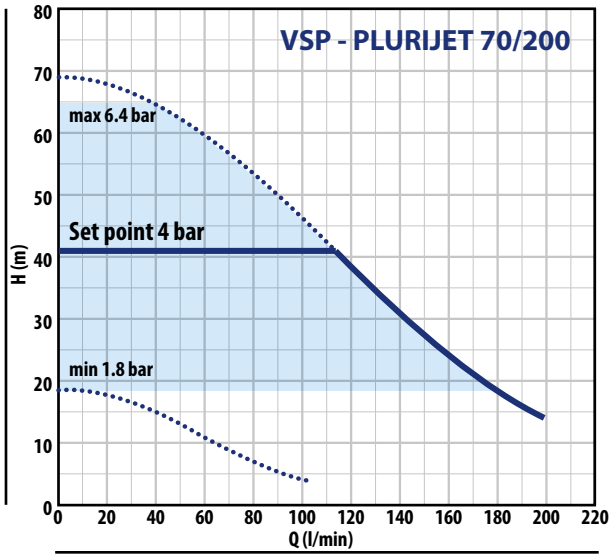

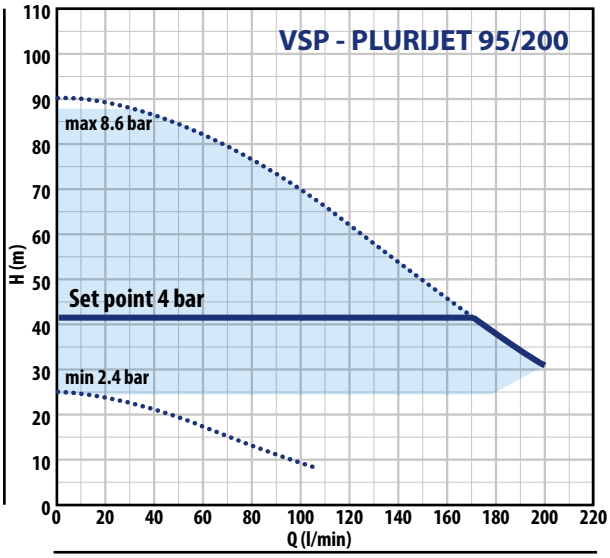

DIMENSIONS AND WEIGHT

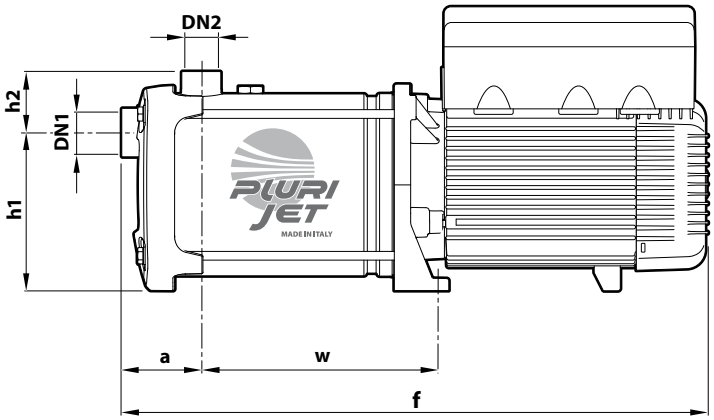

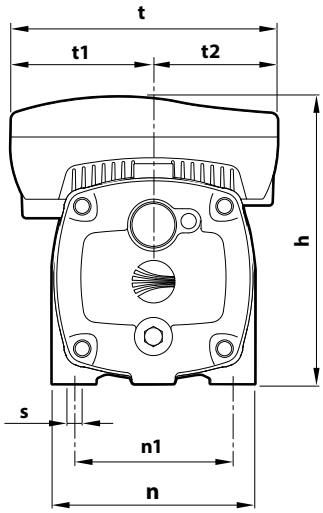

TYPE		PORTS		DIMENSIONS mm												kg	
Single-phase	**Three-phase**	DN1	DN2	f	a	w	h	h1	h2	t	t1	t2	n	n1	s	1~	3~
VSPm - PLURIJET 75/90	**VSP - PLURIJET 75/90**			497		191										21.7	21.7
–	**VSP - PLURIJET 100/90**			523		217										–	23.9
VSPm - PLURIJET 80/130	**VSP - PLURIJET 80/130**			497		191										21.9	21.9
–	**VSP - PLURIJET 105/130**	**1¼"**	**1"**	523	75	217	260	145	59	242	129	113	185	145	11	–	24.1
VSPm - PLURIJET 70/200	**VSP - PLURIJET 70/200**			497		191										21.9	21.9
–	**VSP - PLURIJET 95/200**			523		217										–	24.0

VSP – MK

PERFORMANCE RANGE

50 Hz

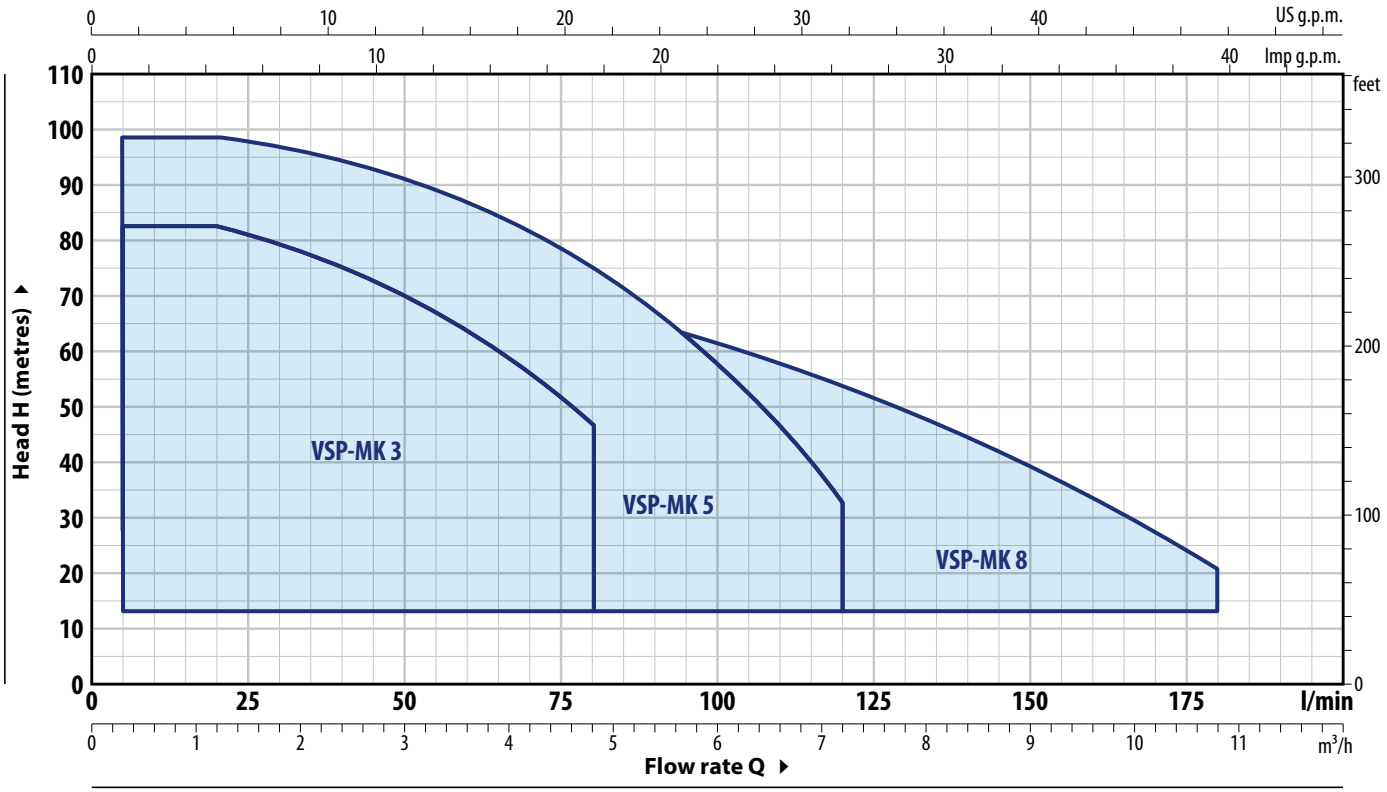

TECHNICAL DATA

TYPE	POWER P2		ABSORPTION 230 V	PERFORMANCE Q	PERFORMANCE H	PERFORMANCE (ADJUSTABLE SET POINT) Set Point Min		Set Point Calibration Std		Set Point Max	
Single-phase	**kW**	**HP**		litres/min	metres	bar	l/min	bar	l/min	bar	l/min
VSPm - MK 3/3	0.75	1	6.2 A	10 – 80	52 – 29	1.4	5 – 52	**4.0**	5 – **52**	5.0	5 – 14
VSPm - MK 3/5	1.1	1.5	7.8 A	10 – 80	85 – 48	2.3	5 – 52	**4.0**	5 – **72**	8.3	5 – 13
VSPm - MK 3/6	1.5	2	9.0 A	10 – 80	101 – 56	2.7	5 – 53	**4.0**	5 – **65**	9.7	5 – 19
VSPm - MK 5/4	0.75	1	6.4 A	20 – 120	55 – 20	1.5	5 – 101	**4.0**	5 – **82**	5.3	5 – 26
VSPm - MK 5/5	1.1	1.5	6.5 A	20 – 120	69 – 21.5	1.8	5 – 108	**4.0**	5 – **99**	6.7	5 – 13
VSPm - MK 5/7	1.5	2	9.0 A	20 – 120	95 – 30	2.6	5 – 109	**4.0**	5 – **111**	9.3	5 – 16
VSPm - MK 8/4	1.1	1.5	8.3 A	40 – 180	53 – 12	1.4	5 – 175	**4.0**	5 – **115**	5.2	5 – 30
VSPm - MK 8/5	1.5	2	10.0 A	40 – 180	68 – 15.5	1.8	5 – 175	**4.0**	5 - **138**	6.6	5 – 45

TYPE	POWER P2		ABSORPTION 400 V	PERFORMANCE Q	PERFORMANCE H	PERFORMANCE (ADJUSTABLE SET POINT) Set Point Min		Set Point Calibration Std		Set Point Max	
Three-phase	**kW**	**HP**		litres/min	metres	bar	l/min	bar	l/min	bar	l/min
VSP - MK 3/3	0.75	1	1.7 A	10 – 80	52 – 29	1.4	5 – 52	**4.0**	5 – **52**	5.0	5 – 14
VSP - MK 3/5	1.1	1.5	2.3 A	10 – 80	85 – 48	2.3	5 – 52	**4.0**	5 – **72**	8.3	5 – 13
VSP - MK 3/6	1.5	2	2.8 A	10 – 80	101 – 56	2.7	5 – 53	**4.0**	5 – **65**	9.7	5 – 19
VSP - MK 5/4	0.75	1	2.0 A	20 – 120	55 – 20	1.5	5 – 101	**4.0**	5 – **82**	5.3	5 – 26
VSP - MK 5/5	1.1	1.5	2.2 A	20 – 120	69 – 21.5	1.8	5 – 108	**4.0**	5 – **99**	6.7	5 – 13
VSP - MK 5/7	1.5	2	3.0 A	20 – 120	95 – 30	2.6	5 – 109	**4.0**	5 – **111**	9.3	5 – 16
VSP - MK 5/8	2.2	3	3.5 A	20 – 120	108 – 34	2.9	5 – 109	**4.0**	5 – **115**	10.6	5 – 14
VSP - MK 8/4	1.1	1.5	2.8 A	40 – 180	53 – 12	1.4	5 – 175	**4.0**	5 – **115**	5.2	5 – 30
VSP - MK 8/5	1.5	2	3.4 A	40 – 180	68 – 15.5	1.8	5 – 175	**4.0**	5 - **138**	6.6	5 – 45
VSP - MK 8/6	2.2	3	3.8 A	40 – 180	81 – 18.5	2.2	5 – 175	**4.0**	5 – **149**	8.0	5 – 22

PERFORMANCE CURVES

50 Hz

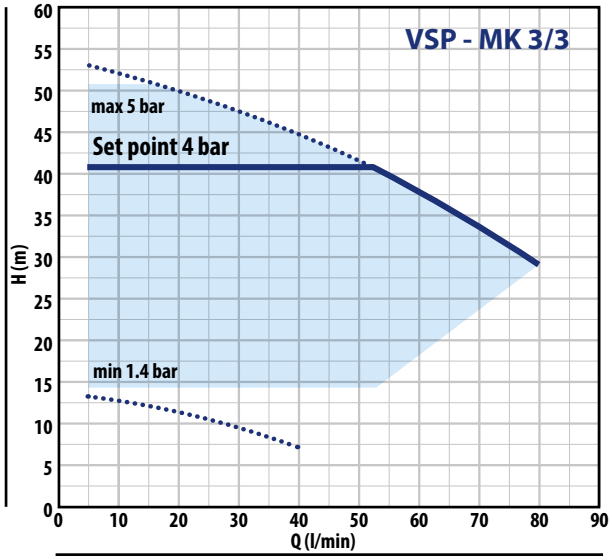

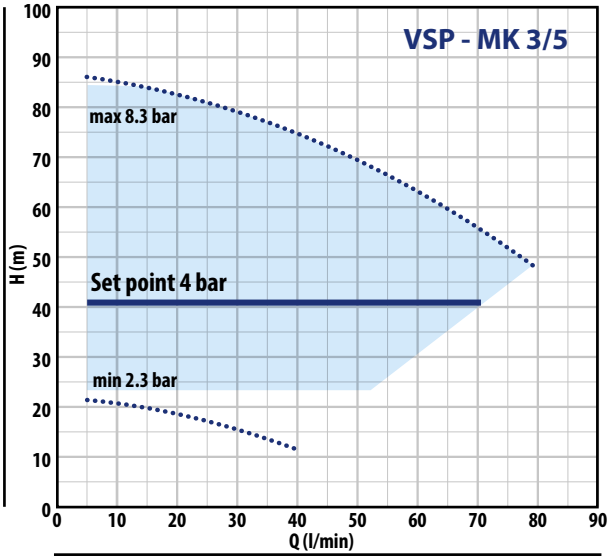

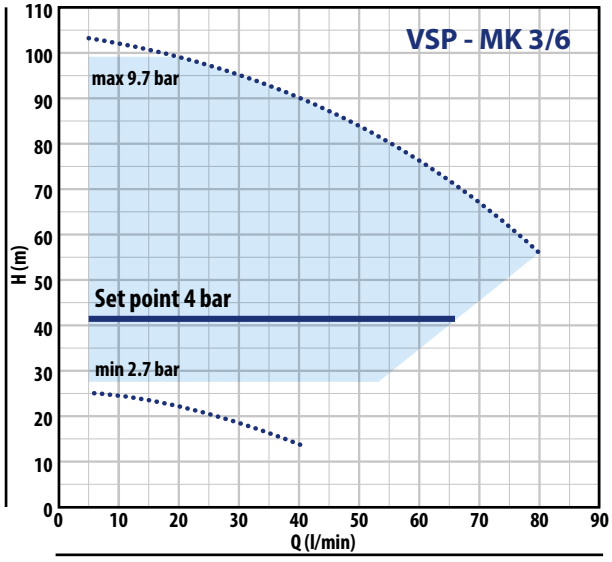

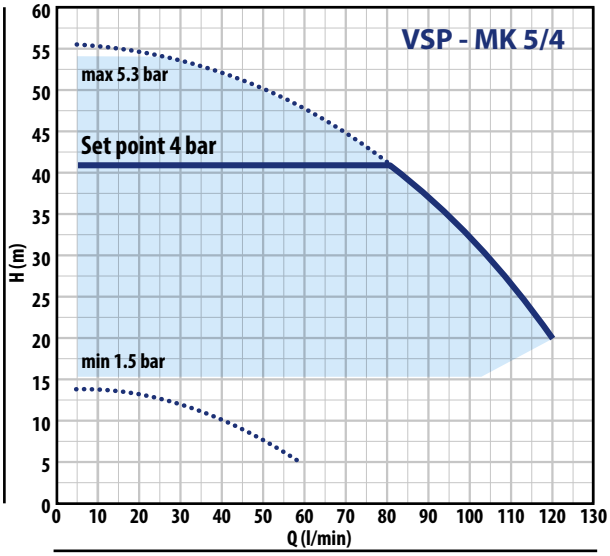

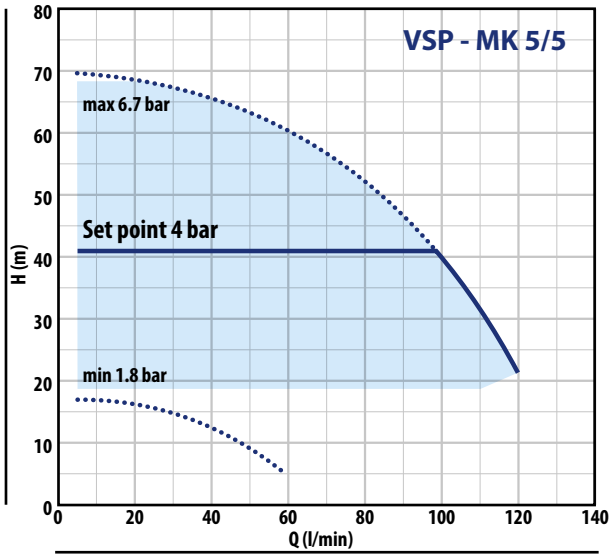

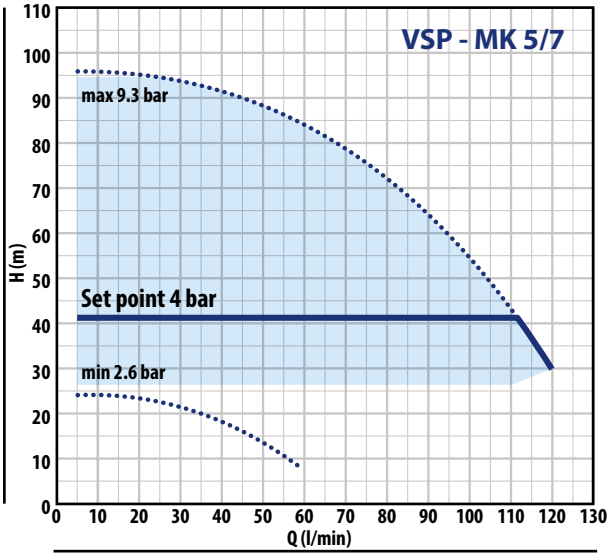

VSP – MK

PERFORMANCE CURVES

50 Hz

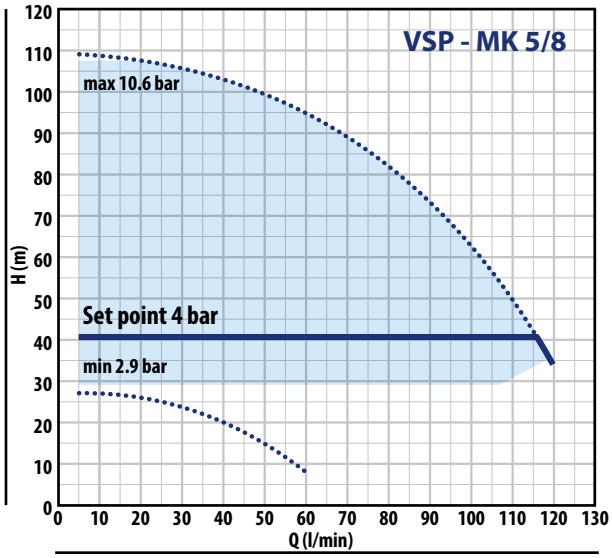

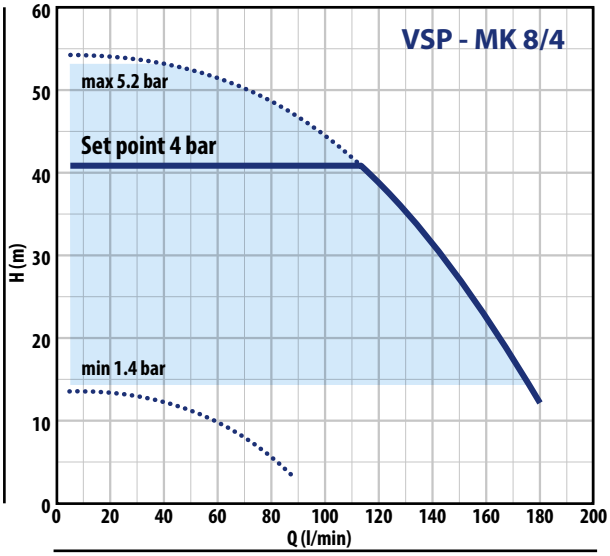

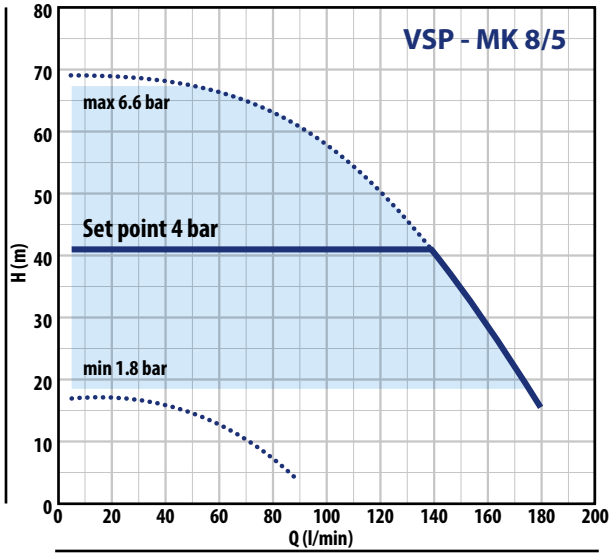

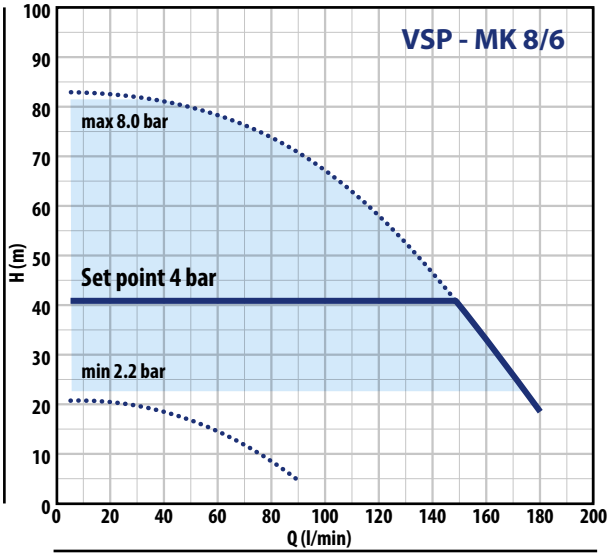

DIMENSIONS AND WEIGHT

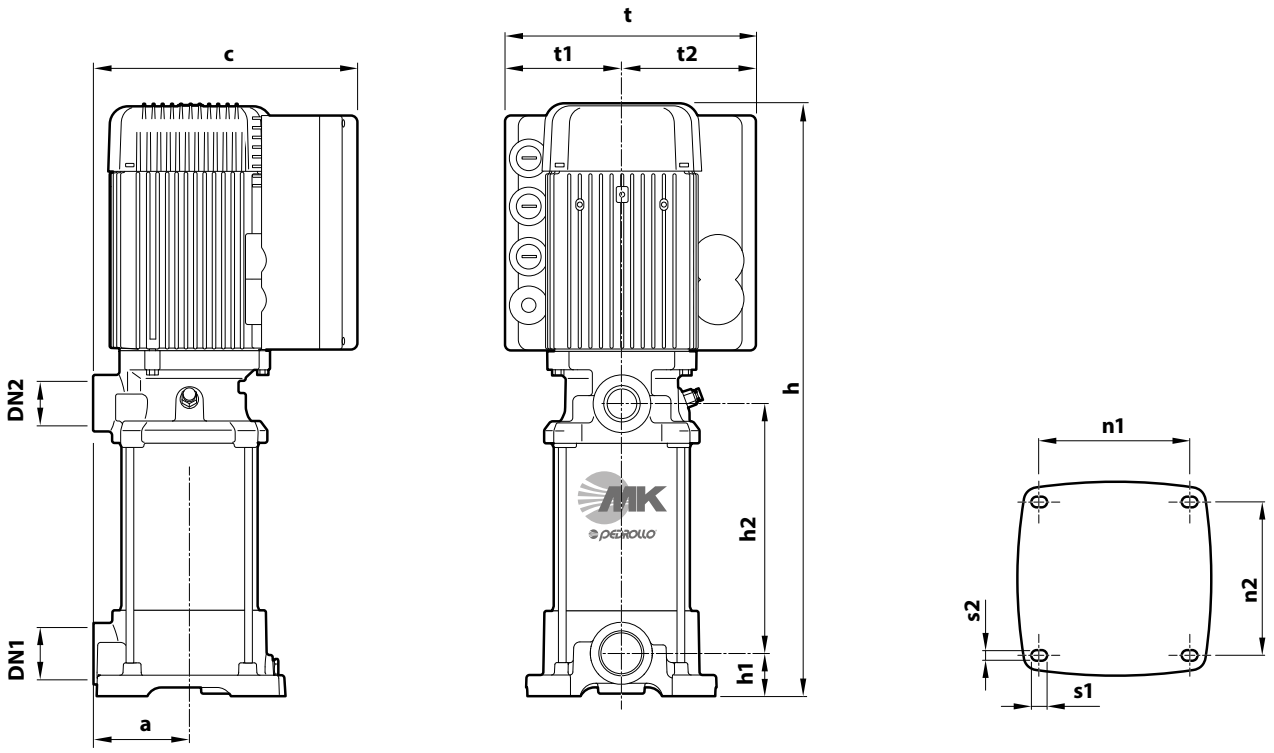

TYPE		PORTS		DIMENSIONS mm												kg	
Single-phase	**Three-phase**	DN1	DN2	a	c	h	h1	h2	t	t1	t2	n1	n2	S1	s2	1~	3~
VSPm - MK 3/3	**VSP - MK 3/3**					447		132								23.3	23.3
VSPm - MK 3/5	**VSP - MK 3/5**					501		186								25.5	25.5
VSPm - MK 3/6	**VSP - MK 3/6**					528		213								27.3	27.3
VSPm - MK 5/4	**VSP - MK 5/4**					474		159								23.8	23.8
VSPm - MK 5/5	**VSP - MK 5/5**					501		186								25.2	25.2
VSPm - MK 5/7	**VSP - MK 5/7**	**1¼"**	**1"**	93	255	555	41	240	242	113	129	143	146	14.5	10	28.3	28.3
–	**VSP - MK 5/8**					602		267								–	28.6
VSPm - MK 8/4	**VSP - MK 8/4**					474		159								26.6	26.6
VSPm - MK 8/5	**VSP - MK 8/5**					501		186								27.0	27.0
–	**VSP - MK 8/6**					548		213								–	29.4

VSP – HT-PRO

PERFORMANCE RANGE

50 Hz

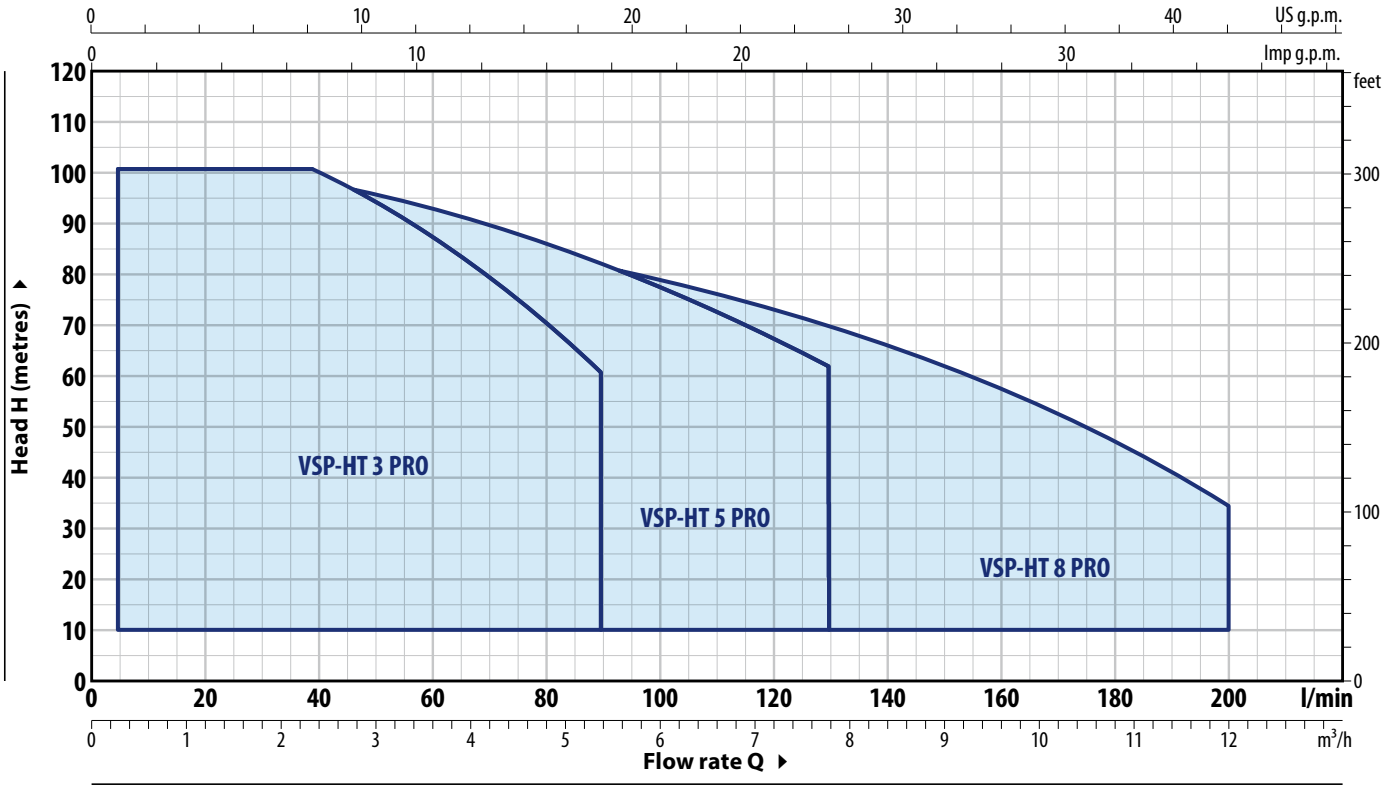

TECHNICAL DATA

TYPE	POWER P2		ABSORPTION 230 V	PERFORMANCE Q	PERFORMANCE H	PERFORMANCE (ADJUSTABLE SET POINT) Set Point Min		Set Point Calibration Std		Set Point Max	
Single-phase	kW	HP		litres/min	metres	bar	l/min	bar	l/min	bar	l/min
VSPm - HT 3/4 PRO	0.75	1	7.5 A	5 – 90	65 – 35	1.6	5 – 59	**4.0**	5 – **73**	5.9	5 – 19
VSPm - HT 3/5 PRO	1.1	1.5	9.0 A	5 – 90	80 – 44	2.0	5 – 62	**4.0**	5 – **86**	7.4	5 – 22
VSPm - HT 3/6 PRO	1.5	2	10.5 A	5 – 90	96 – 52	2.4	5 – 62	**4.0**	5 – **84**	8.8	5 – 20
VSPm - HT 5/2 PRO	0.75	1	7.0 A	5 – 130	35 – 20.5	0.8	5 – 83	**2.0**	5 – **114**	3.1	5 – 22
VSPm - HT 5/3 PRO	1.1	1.5	8.0 A	5 – 130	51.5 – 31	1.3	5 – 91	**4.0**	5 – **71**	4.8	5 – 14
VSPm - HT 5/4 PRO	1.5	2	9.5 A	5 – 130	68.5 – 41	1.7	5 – 90	**4.0**	5 – **108**	6.1	5 – 26
VSPm - HT 8/3 PRO	1.1	1.5	8.5 A	20 – 200	46.5 – 17	1.1	5 – 182	**4.0**	5 – **58**	4.1	5 – 28
VSPm - HT 8/4 PRO	1.5	2	10.0 A	20 – 200	62 – 23	1.5	5 – 180	**4.0**	5 – **128**	5.4	5 – 48

TYPE	POWER P2		ABSORPTION 400 V	PERFORMANCE Q	PERFORMANCE H	PERFORMANCE (ADJUSTABLE SET POINT) Set Point Min		Set Point Calibration Std		Set Point Max	
Three-phase	kW	HP		litres/min	metres	bar	l/min	bar	l/min	bar	l/min
VSP - HT 3/4 PRO	0.75	1	2.5 A	5 – 90	65 – 35	1.6	5 – 59	**4.0**	5 – **73**	5.9	5 – 19
VSP - HT 3/5 PRO	1.1	1.5	3.0 A	5 – 90	80 – 44	2.0	5 – 62	**4.0**	5 – **86**	7.4	5 – 22
VSP - HT 3/6 PRO	1.5	2	3.5 A	5 – 90	96 – 52	2.4	5 – 62	**4.0**	5 – **84**	8.8	5 – 20
VSP - HT 3/7 PRO	1.8	2.5	4.2 A	5 – 90	112 – 61	2.8	5 – 62	**4.0**	5 – **76**	10.2	5 – 25
VSP - HT 5/2 PRO	0.75	1	2.3 A	5 – 130	35 – 20.5	0.8	5 – 83	**2.0**	5 – **114**	3.1	5 – 22
VSP - HT 5/3 PRO	1.1	1.5	2.4 A	5 – 130	51.5 – 31	1.3	5 – 91	**4.0**	5 – **71**	4.8	5 – 14
VSP - HT 5/4 PRO	1.5	2	3.2 A	5 – 130	68.5 – 41	1.7	5 – 90	**4.0**	5 – **108**	6.1	5 – 26
VSP - HT 5/5 PRO	1.8	2.5	4.0 A	5 – 130	85 – 51.5	2.1	5 – 91	**4.0**	5 – **128**	7.5	5 – 42
VSP - HT 5/6 PRO	2.2	3	4.3 A	5 – 130	103 – 62	2.6	5 – 92	**4.0**	5 – **118**	9.3	5 – 25
VSP - HT 8/3 PRO	1.1	1.5	3.0 A	20 – 200	46.5 – 17	1.1	5 – 182	**4.0**	5 – **58**	4.1	5 – 28
VSP - HT 8/4 PRO	1.5	2	3.4 A	20 – 200	62 – 23	1.5	5 – 180	**4.0**	5 – **128**	5.4	5 – 48
VSP - HT 8/5 PRO	1.8	2.5	4.0 A	20 – 200	77.5 – 28.5	1.8	5 – 181	**4.0**	5 – **156**	6.7	5 – 44
VSP - HT 8/6 PRO	2.2	3	4.5 A	20 – 200	93 – 34.5	2.3	5 – 186	**4.0**	5 – **179**	8.2	5 – 32

PERFORMANCE CURVES

50 Hz

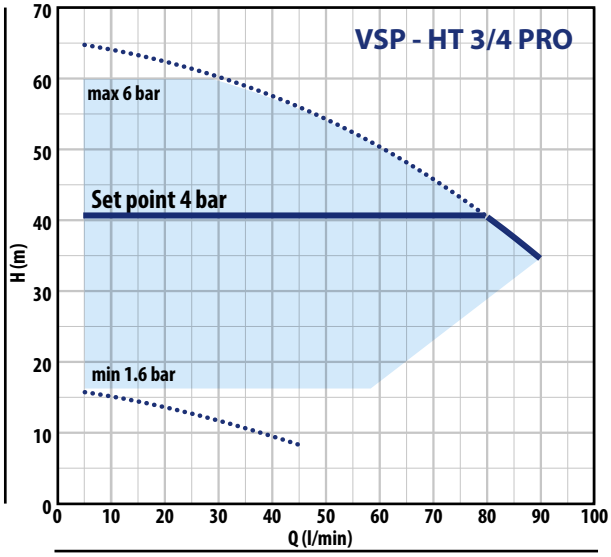

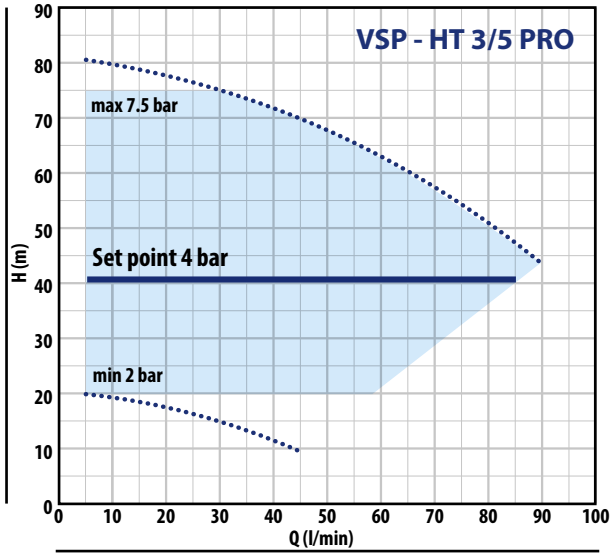

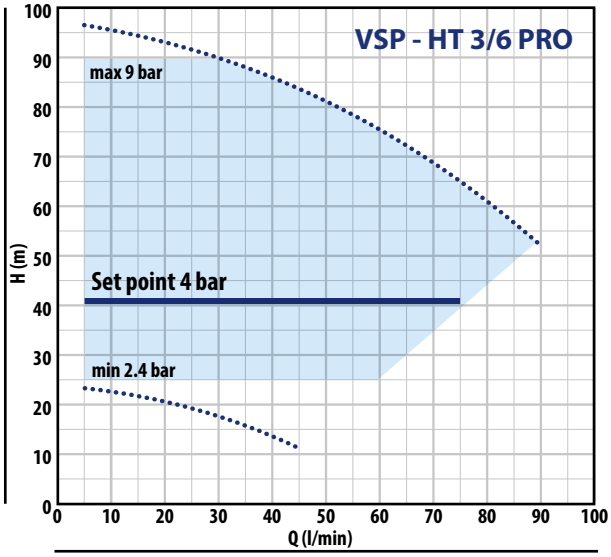

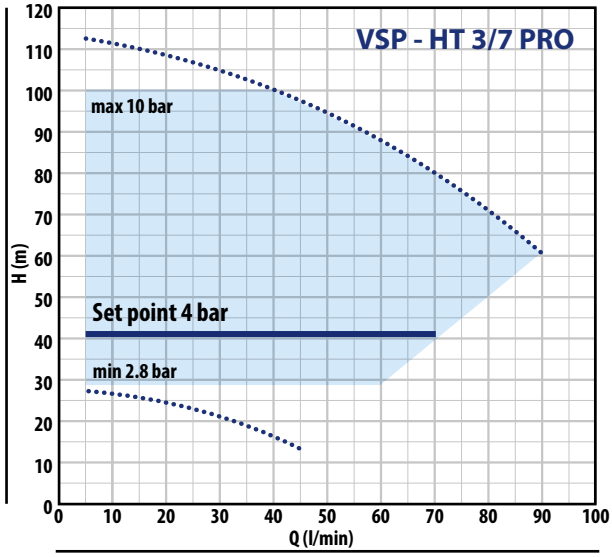

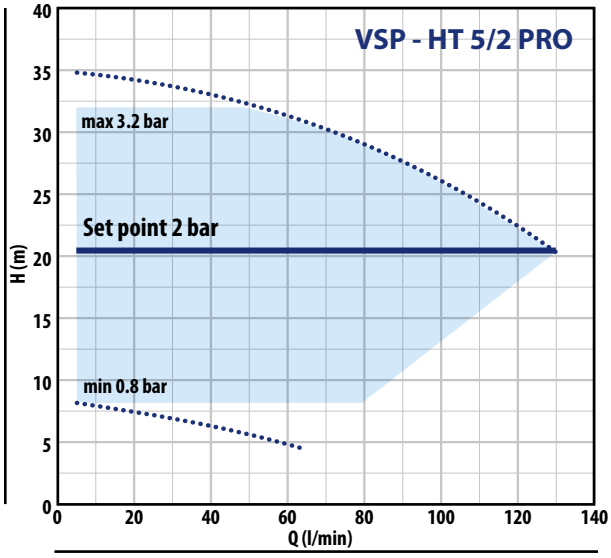

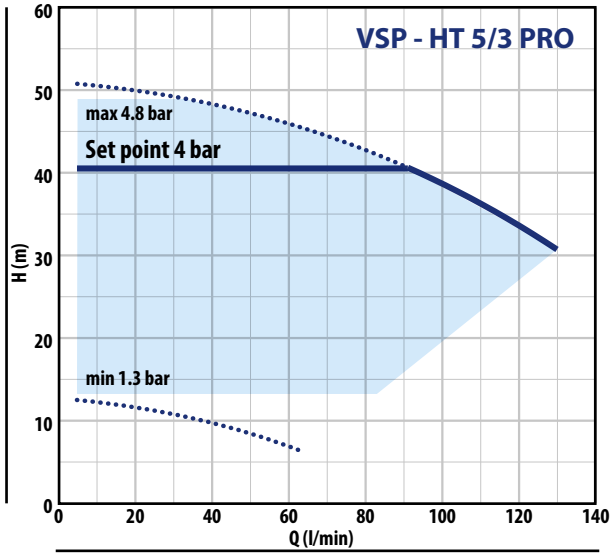

VSP – HT-PRO

PERFORMANCE CURVES

50 Hz

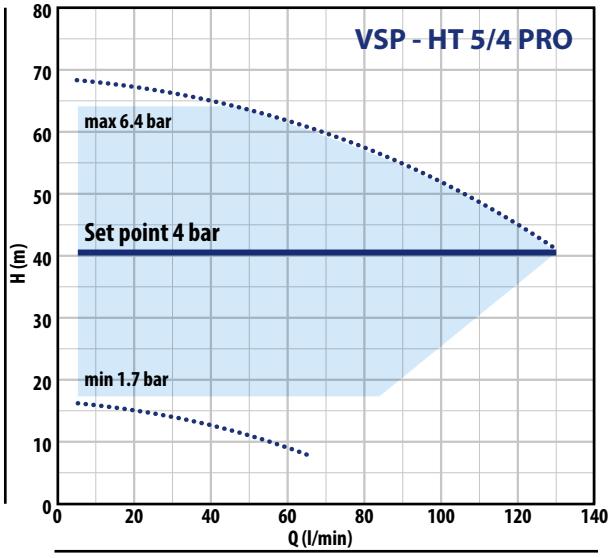

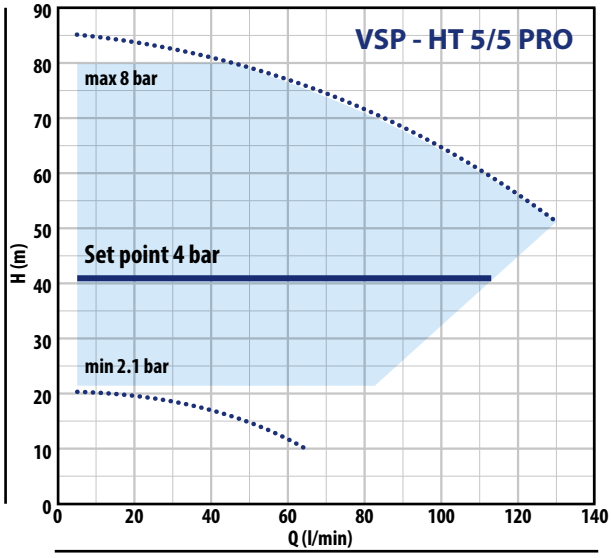

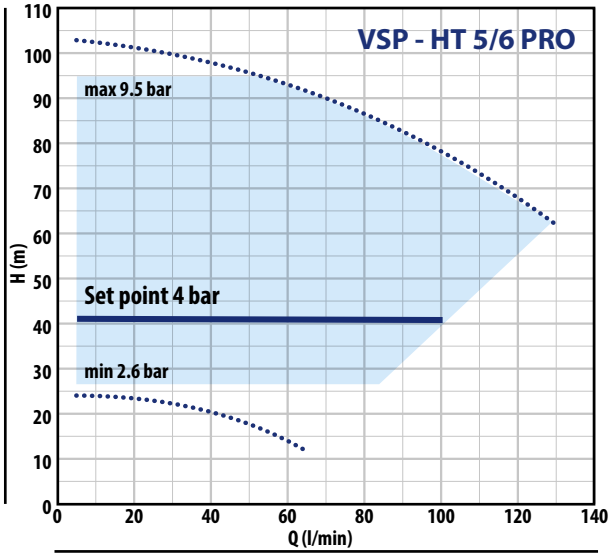

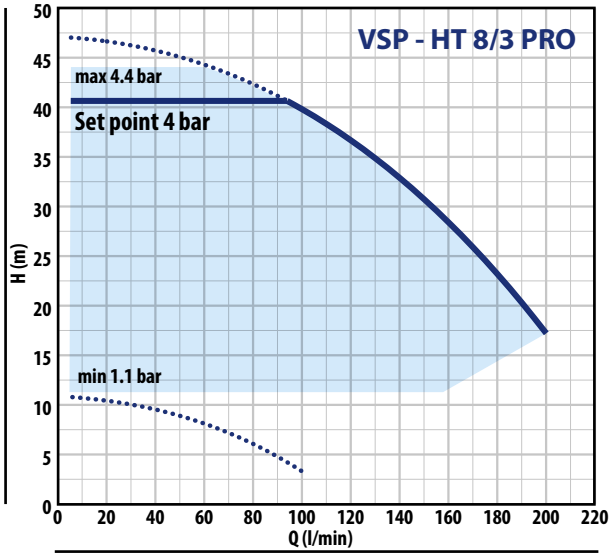

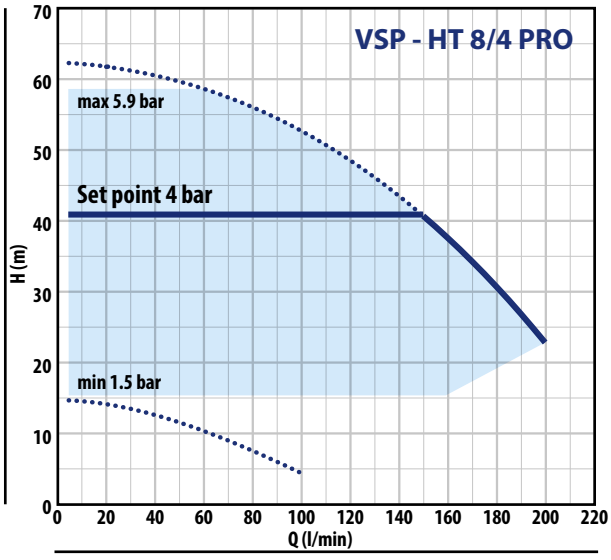

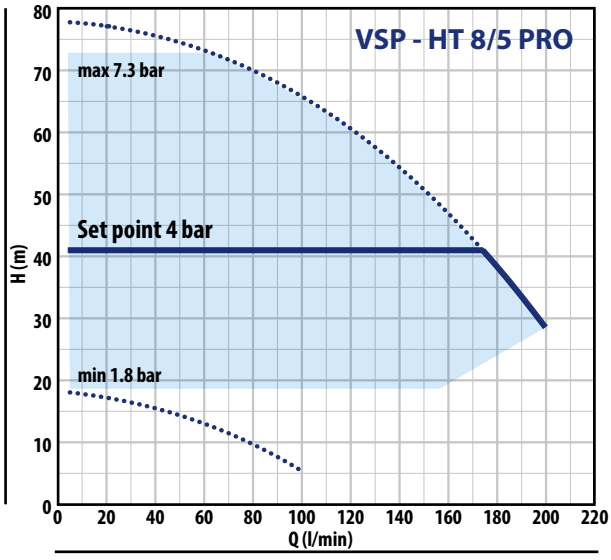

PERFORMANCE CURVES

50 Hz

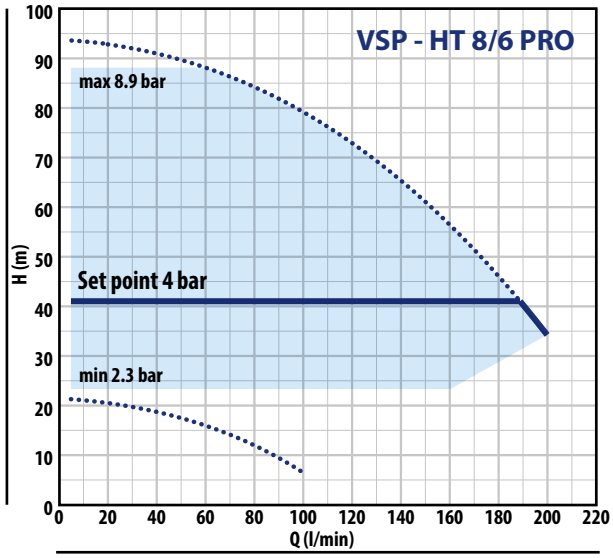

DIMENSIONS AND WEIGHT

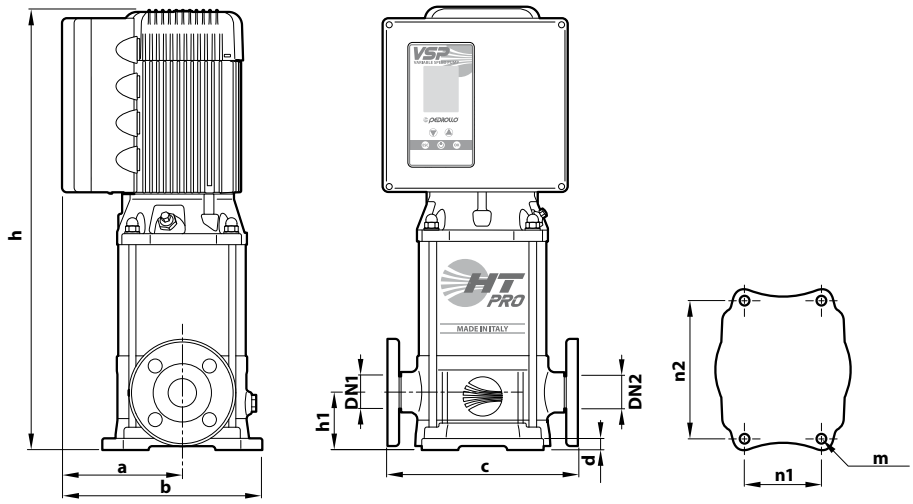

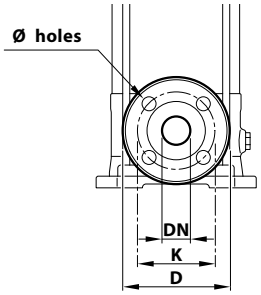

TYPE VSP	DN mm	D mm	K mm	Ø mm
HT 3	**25**	115	85	14
HT 5	**32**	140	100	18
HT 8	**40**	150	110	

TYPE		PORTS		DIMENSIONS mm									kg	
Single-phase	**Three-phase**	DN1	DN2	a	b	c	d	h	h1	n1	n2	m	**1~**	**3~**
VSPm - HT 3/4 PRO	**VSP - HT 3/4 PRO**	**1"**	**1"**	164	269	212	15	509	75	100	180	Ø 13	35.3	34.8
VSPm - HT 3/5 PRO	**VSP - HT 3/5 PRO**							535					35.5	35.0
VSPm - HT 3/6 PRO	**VSP - HT 3/6 PRO**							561					36.2	37.1
–	**VSP - HT 3/7 PRO**							607					–	41.2
VSPm - HT 5/2 PRO	**VSP - HT 5/2 PRO**	**1¼"**	**1¼"**					457					33.2	33.2
VSPm - HT 5/3 PRO	**VSP - HT 5/3 PRO**							483					33.4	33.4
VSPm - HT 5/4 PRO	**VSP - HT 5/4 PRO**							509					35.3	35.4
–	**VSP - HT 5/5 PRO**							555					–	39.1
–	**VSP - HT 5/6 PRO**							581					–	40.1
VSPm - HT 8/3 PRO	**VSP - HT 8/3 PRO**	**1½"**	**1½"**			240		488	80				33.9	33.9
VSPm - HT 8/4 PRO	**VSP - HT 8/4 PRO**							514					35.8	35.9
–	**VSP - HT 8/5 PRO**							560					–	39.4
–	**VSP - HT 8/6 PRO**							586					–	40.2